SENSON

千昌機械股份有限公司

since1976 CHIAN CHANG MACHINE CO.,LTD.

營業處：台北縣蘆洲市三民路196號

Office: No.196, San Min Road, Luchou City, Taipei Hsien, Taiwan
Tel.: 886-2-22818331, 22810904, 22828461 Fax : 886-2-22829202
E-mail: chenchan@ms12.hinet.net
Web Site: http://www.pressmachine.com.tw

工廠：台南縣後壁鄉頂長村長短樹50號之5

Factory: No.50-5, Chang Twan Shu, Ting Chang
Vill., Hou Bi Hsiang, Tainan Hsien, Taiwan
Tel.: 886-6-6623329, 6623339 Fax: 886-6-6622772
E-mail: csp.hsp@msa.hinet.net

CHIAN CHANG MACHINE (THAILAND) CO.,LTD.

千昌泰國廠：泰國春武里府曠縣農黎村第5社區5/1號 20000

Factory: No.5/1 Moo 5, Nongree, Muang, Chonburi, 20000 Thailand
TEL：038100327 FAX：038100328

AFAQ ISO 9001

C型雙軸式精密沖床
C-FRAME DOUBLE CRANK PRECISION POWER PRESS

CDP-110 / 160 / 200 / 260
110~260 tons

SENSON

since1976 千昌機械股份有限公司
CHIAN CHANG MACHINE CO.,LTD.

SENSON

C型雙軸式精密沖床
C -FRAME DOUBLE CRANK PRECISION POWER PRESS

CDP-110 / 160 / 200 / 260 110~260tons

六面導軌 Six-face Guide Rail

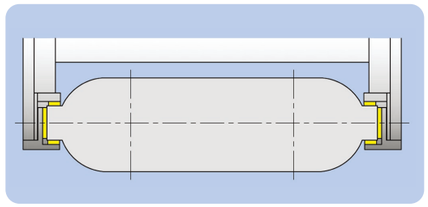

球螺桿

Ball Rod

採SCM4合金剛材質，使用壽命特長；球螺桿母採用鋁青銅加工成型，運轉精確平順。

The ball rod is made of SCM4 alloy-steel for longer duration. Extra aluminumbronze is added as its nut for accurate movement without sudden changes.

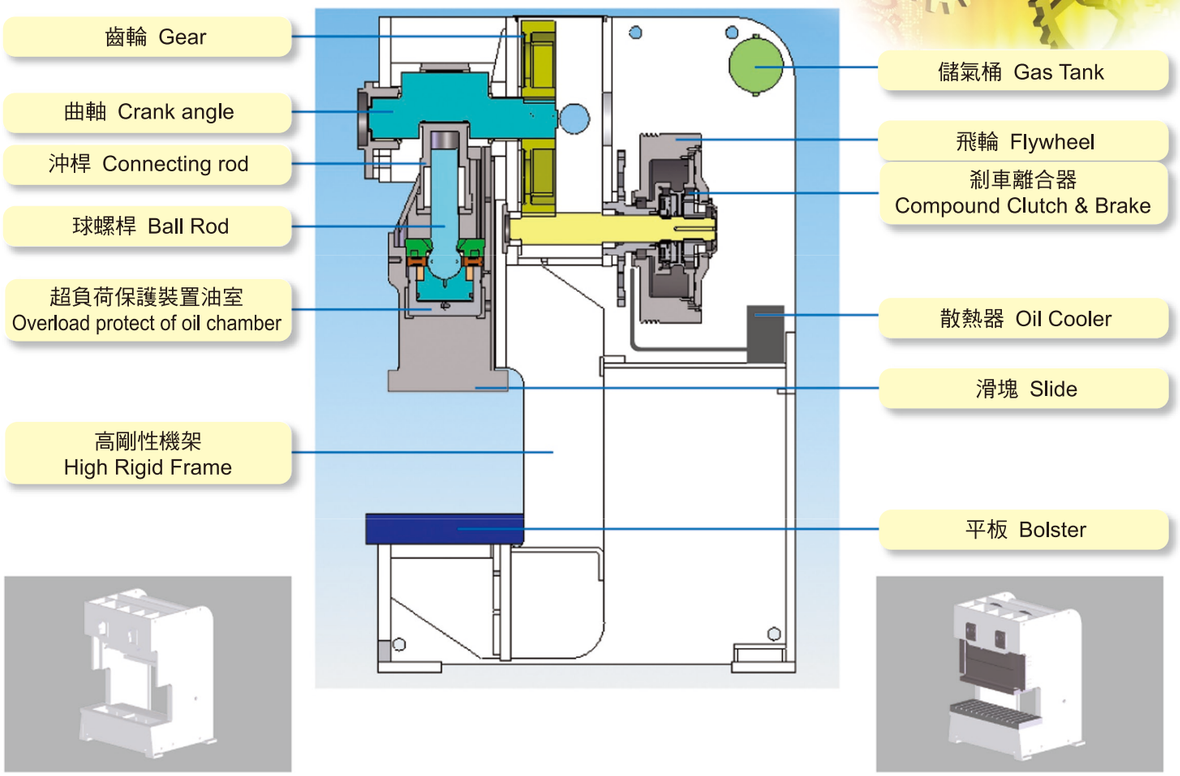

CDP系列特點說明

- 先進多功能控制器：搭配LED角度顯示器及電子數字顯示幕，衝床運轉狀態易懂易操作。直接於觸控式面板設定欲動作及停止角度，免除傳統。
- 高剛性機架：機架採剛性極佳之鋼板焊接而成後經退火熱處理，承受力及延展性極佳，堅實耐用。
- 六面寬長型導軌：六面寬長型導軌採磷青銅材質，耐磨耗並能確保滑塊平穩且精確運作，不但促進工作效率，生產完美品質，更可延長模具壽命。
- 雙曲軸反方向同步運動，無側向壓力，可容許較大偏心負荷之沖壓工作。
- 適用範圍廣泛：滑塊底面積及平板面積寬廣，適合各種汽機車零件、機械零件、電器及PC零件..等之連續沖壓作業。

Features of CDP Series

- Advanced Multifunctional Controller:
  An advanced multifunctional controller with LED crank angle display and digital screen, easy-to-see and easy-to-operate.Direct input of the desired movement and stop angles on the touch screen control panel, without the trouble of adjusting angles from the cam box for conventional PLC and relay loop.
- High Rigidity Frame: the machine frame is welded with steels of excellent rigidity and treated by annealing, it is very tough,ductile, strong and durable.
- Six-face wide-and-long Guide Rail: The guide rail is made of phosphor bronze, which is excellent resistance andures smooth and accurate slide movement. Not only improves work efficiency with perfect production quality but also extends die life.
- Double crank simultaneous motion the opposite direction, which is on side pressure and alltows to work for larger eccentric load.
- Extensive Scope of Application:Broad slide bottom and bolster are suitable for punching operations with progressive dies for various automotive, motorcycle and machine components,sppliance and computer parts.

油壓式超負荷保護裝置 Hydraulic Overload Protector

沖床滑塊裝有超負荷裝置，用以保護沖床及模具安全，無咬模之顧慮。

When an overload ocurs, the press instanly goes into emergency stop mode to protect the die and the press, without concern about die jam.

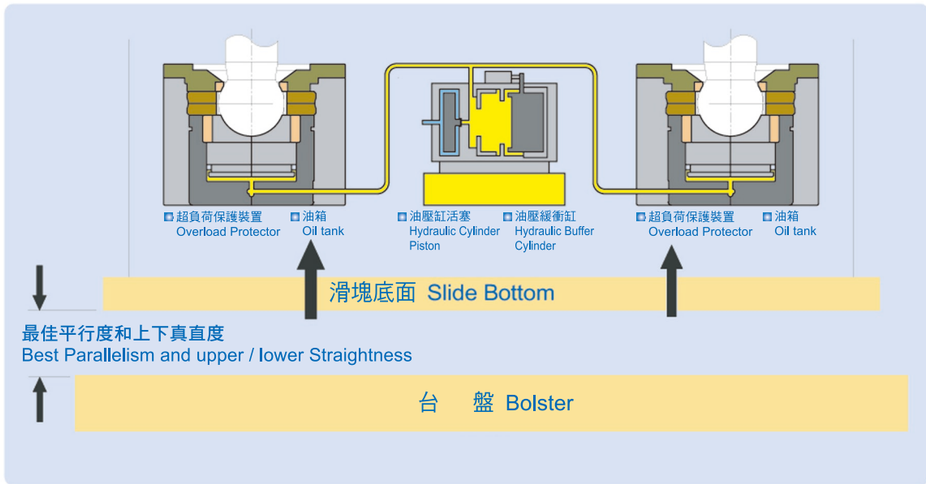

www.pressmachine.com.tw

SENSON

C型雙軸式精密沖床
C-FRAME DOUBLE CRANK PRECISION POWER PRESS

CDP-110 / 160 / 200 / 260 110~260tons

CHIAN CHANG MACHINE CO.,LTD.

先進多功能控制器 Multi-Function Controller

防油汙觸控式控制面板 Touch Screen Control Panel

搭配曲軸角度LED顯示器及電子數字顯示幕，沖床運轉狀態易懂易操作。直接於觸控式面板設定欲動作及停止角度，免除傳統PLC及繼電器迴路須自凸輪箱調整角度之不便。值得一提的是，本機可細調動作角度每1度的變化量，符合最精密的製程。另備有電子式凸輪5組，可自由規劃角度功能輸出搭配沖床週邊設備，自動化作業便利。

A multi-function controller with crank angle LED display and digital screen, easy-to-see and easy-to-operate. Direct input desired movement and stop angles on the touch screen control panel, without the trouble of adjusting angles from the cam box for conventional PLC and relay loop. It is worth mentioning that the variation associated with each degree fine-tuned in the machine matches perfectly with the most precise manufacturing process. Five (5) addition electronic rotary cams are ready for connecting with press peripherals for automatic operation.

【單/雙手按鈕操作台】
Single / Two-hand Push Button Operation Stand

多台開放式網路連結功能：
一個網路可提供256台沖床同時連線，整廠集中監控，降低管理成本，提高產業競爭力。（該功能軟、硬體為選擇配件並視客戶實際需求編寫，費用另計。）

Open network for a number of presses:
A network can simultaneously serve 256 online presses. The entire plant is under centralized monitor, so the management cost is considerably reduced and the business competitiveness is greatly improved.
※Additional charge for the software and hardware depends on customer's needs.
(Optional Accessory)

選購配備 Optional Equipment

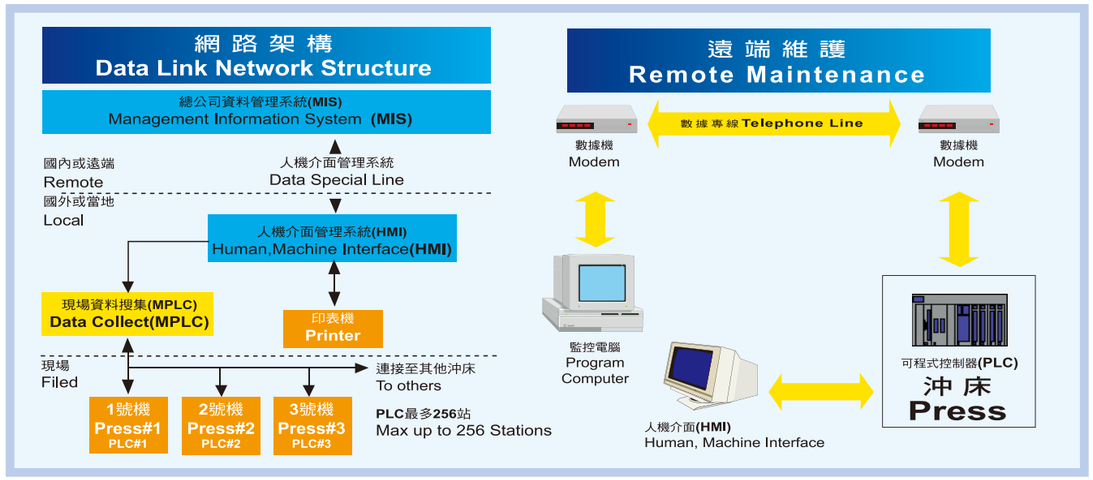

機器外觀尺寸 Major Dimension

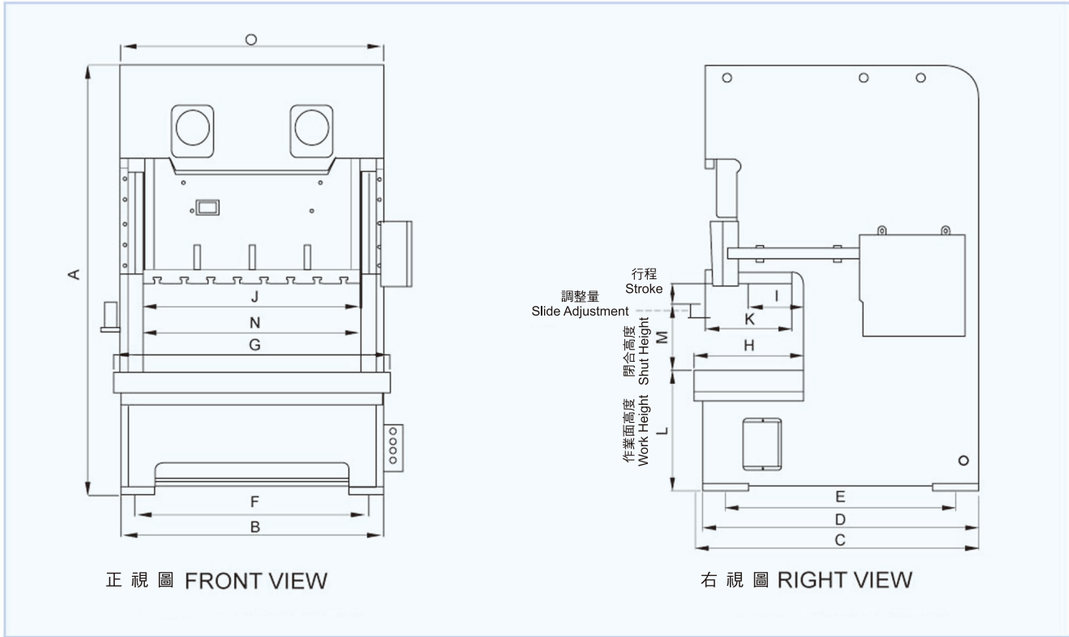

Model \ Size	A	B	C	D	E	F	G	H	I	J	K	L	M	N	O
CDP-110	2930	2160	1825	1805	1545	1960	1900	680	345	1460	560	880	400	1530	1830
CDP-160	3180	2230	1980	1930	1610	2030	2040	760	390	1600	600	900	450	1620	1940
CDP-200	3520	2250	2230	2180	1820	1950	2250	815	435	1860	660	970	500	1890	2250
CDP-260	3920	2900	2520	2480	2120	2660	2720	920	465	2120	720	1060	550	2200	2580

滑塊底面/T型槽尺寸圖/沖床平板
Silde Bottom/T-Slot Diagram/Bolster

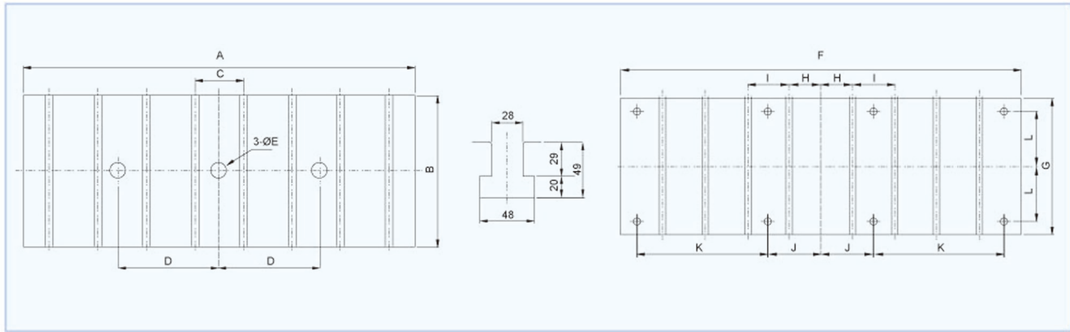

Model \ Size	A	B	C	D	E	F	G	H	I	J	K	L
CDP-110	1460	560	180	375	⌀50.8	1900	680	150	200	250	620	275
CDP-160	1600	600	200	400	⌀50.8	2040	760	200	200	300	640	300
CDP-200	1860	660	220	450	⌀50.8	2420	860	215	220	300	860	300
CDP-260	2120	720	260	450	⌀50.8	2720	920	215	220	300	860	350

www.pressmachine.com.tw

SENSON

C型雙軸式精密沖床
C-FRAME DOUBLE CRANK PRECISION POWER PRESS

CDP-110 / 160 / 200 / 260 110~260tons

CHIAN CHANG MACHINE CO.,LTD.

標準規格 Specifications

型號 Model Number	CDP-110	CDP-160	CDP-200	CDP-260
沖壓能力(噸) Capacity(tonf)	110	160	200	260
行程(mm) Slide Stroke Length	180	200	220	240
每分鐘沖數(Variable Speed) Strokes Per Minute	30-65	30-50	25-47	20-41
能力發生位置 Tonnage Rating Point(mm)	5	6	6	7
閉合高度(下死點至平板距離) Shut Height (S.D.A.U)(mm)*M*	400	450	500	550
滑塊調整量 Slide Adjustment(mm)	100	110	120	130
滑塊底面積 ＊J × K＊ Slide Bottom Area *J×K*(mm)	1460x560	1600x600	1860x660	2120x720
台盤(平板)面積 ＊G × H＊ Bolster Area *G×H*(mm)	1900x680	2040x760	2420x860	2720x920
台盤(平板)厚度 Bolster Thickness (mm)	150	160	170	180
作業面高度 ＊L＊ Work Heigh *L*(mm)	880	900	970	1030
機架內側寬度 ＊N＊ Frame Inside Width *N*(mm)	1530	1620	1890	2190
機器尺寸 ＊B × D＊ Overall Size *B×D*(mm)	2160x1825	2230x1980	2250x2230	2900x2520
機器總高度 ＊A＊ Overall Height *A*(mm)	2930	3180	3520	3860
主馬達(變速)(KW×P) Main Motor(Variable Speed)(KW×P)	11x4	15x4	19x4	22x4
滑塊調整馬達(KW×P) Slide Adjust Motor(KW×P)	0.75x4	0.75x4	1.5x4	2.2x4
使用空氣壓力 Air Pressure (kgf/cm²)	5	5	5	5

附註: 規格如變更不另通知，以實際出廠產品規格為主。
PS: Based on the main factory production, rights of modification reserved.

標準型配件 Standard Accessories

- 選擇開關(切、寸動、單動、安全一行程、連續) Operation mode ("off", "inch"/"single"/"safe single"/ "continuous")
- 複合氣壓式剎車離合器 Compound clutch & brake
- 滑塊及模具平衡裝置 Counter balancer (Equilibrating cylinders)
- 電動式滑塊調整裝置 Motorized slide adjuster
- 數字式模高指示器 Die height indicator
- 譯碼器 Encoder
- 360° 曲軸角度LED顯示器 Crank angle LED display
- 沖床轉數顯示器 S.P.M. display
- 批量計數器 (可預調,6位數) Product lot counter (Preset,6-digit)
- 總量計數器 (可預調,6位數) Total counter (Preset,6-digit)
- 剎車角度監視裝置 Brake angle monitor device
- 截斷輸出裝置2組 Cutting outlet:2-set
- 備用電子式凸輪5組 可自由規劃角度功能輸出 Spare electronic rotary cams:5-set
- 定期里程保養自動檢知 Mileage maintenance reminder
- 前一日/前一個月/前一年 產量記錄備查 Pre-date/month/year production performance recorder
- 變頻器（國外採：無段變速V. S. 馬達） Inverter (or Variable speed V.S. motor for overseas market)
- 主馬達正轉/逆轉裝置 "FOR." & "REV" modes for main motor
- 頂料裝置 Knock out device
- 電動黃油加油器 Auto grease pump
- 空氣吹料裝置 Air ejector
- 空氣源插座 Air source socket
- 電源插座110V,5A (國外採:220V,5A) Power socket 220V,5A (for overseas market)
- 自動送料軸 (在前方，送料方向:左-->右) Power take-off feed shaft (feed direction:left-->right)
- 移動式按鈕操作箱 Portable push button operation stand
- 腳踏開關 Foot switch
- 防震腳墊 Rubber mount (Shock absorber)
- 維護工具及工具箱 Maintenance tools with box
- 操作保養說明書 Operation Manual

安全裝置保護人身或模具： Safety devices for protecting workers or tools:

- 油壓式超負荷保護裝置 Hydraulic overload protector
- 誤送檢知迴路4組(2A,2B) Mis-feed detective circuit 4-set (2A,2B)
- 二度落防止裝置 Anti-repeat device (Overrun detector)
- 光電護手安全裝置(選擇配件) Safety light curtain (Optional accessory)

其他選購配備 Optional Accessories

- 氣壓式模墊 Pneumatic die cushion
- 油壓式模墊 Hydraulic die cushion
- 空氣送料機 Air feeder
- 滾輪送料機 Roll feeder
- 自動材料整平機或材料架 Auto material straighter
- 快速換模裝置，如移模臂、抬模器…等 Quick die change system: die lifter, die arm, etc
- 光電護手安全裝置 Safety light curtain

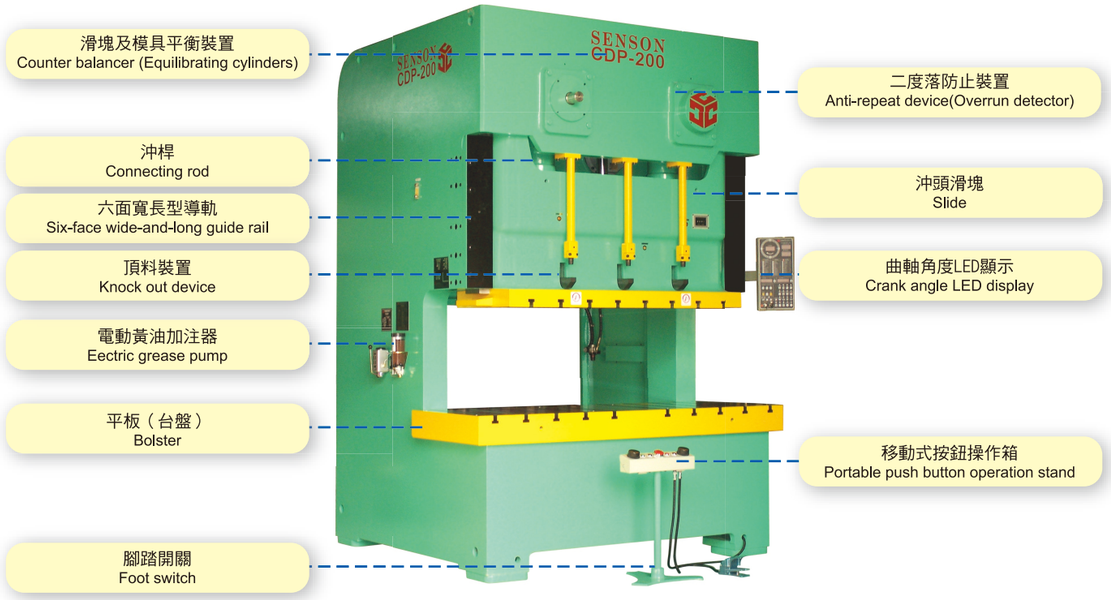

www.pressmachine.com.tw